US006824306B1

(12) **United States Patent**
Fesmire et al.

(10) **Patent No.: US 6,824,306 B1**
(45) **Date of Patent: Nov. 30, 2004**

(54) **THERMAL INSULATION TESTING METHOD AND APPARATUS**

(75) Inventors: **James E. Fesmire**, Titusville, FL (US); **Stanislaw D. Augustynowicz**, Titusville, FL (US)

(73) Assignee: **The United States of America as represented by the Administrator of the National Aeronautics and Space Administration**, Washington, DC (US)

(*) Notice: Subject to any disclaimer, the term of this patent is extended or adjusted under 35 U.S.C. 154(b) by 0 days.

(21) Appl. No.: **10/318,665**

(22) Filed: **Dec. 11, 2002**

(51) **Int. Cl.**[7] **G01N 25/20**
(52) **U.S. Cl.** **374/43**; 374/34
(58) **Field of Search** 374/43, 44, 30, 374/33, 34, 51, 29, 31, 32; 422/51; 436/147, 149, 151; 62/51.1

(56) **References Cited**

U.S. PATENT DOCUMENTS

2,699,060	A	*	1/1955	Safford	374/51
3,242,716	A	*	3/1966	Glaser et al.	374/44
3,263,485	A	*	8/1966	Mahmoodi	374/44
3,266,290	A	*	8/1966	Gottfried	374/44
3,705,498	A	*	12/1972	DeHaan	62/47.1
4,187,956	A	*	2/1980	Schrawer et al.	220/745
4,302,943	A	*	12/1981	Niemann et al.	374/40
4,350,017	A	*	9/1982	Kneip et al.	62/48.1
4,393,716	A	*	7/1983	Clark et al.	374/51
4,522,512	A		6/1985	Atkins	374/44
4,963,499	A	*	10/1990	Stockton et al.	436/147
5,193,909	A		3/1993	Duncan	374/29
5,246,759	A	*	9/1993	Keller	428/74
5,386,706	A		2/1995	Bergsten et al.	62/45.1
5,620,253	A		4/1997	Graebner et al.	374/43
5,708,069	A	*	1/1998	Burns et al.	524/403
5,749,537	A	*	5/1998	Muzio et al.	242/439.5
5,806,979	A		9/1998	Gschneidner, Jr. et al.	374/34

(List continued on next page.)

OTHER PUBLICATIONS

"Standard Test Method for Heat Flux Through Evacuated Insulations Using a Guarded Flat Plate Boiloff Calorimeter," C745–92 (1999), American Society for Testing and Materials, 1999 (8 pages).*

(List continued on next page.)

Primary Examiner—Diego Gutierrez
Assistant Examiner—Stanley J. Pruchnic, Jr.
(74) *Attorney, Agent, or Firm*—Randall M. Heald; Gary Borda; Guy Miller

(57) **ABSTRACT**

A test apparatus and method of its use for evaluating various performance aspects of a test specimen is disclosed. A chamber within a housing contains a cold mass tank with a contact surface in contact with a first surface of a test specimen. The first surface of the test specimen is spaced from the second surface of the test specimen by a thickness. The second surface of the test specimen is maintained at a desired warm temperature. The first surface is maintained at a constant temperature by a liquid disposed within the cold mass tank. A boil-off flow rate of the gas is monitored and provided to a processor along with the temperature of the first and second surfaces of the test specimen. The processor calculates thermal insulation values of the test specimen including comparative values for heat flux and apparent thermal conductivity (k-value). The test specimen may be placed in any vacuum pressure level ranging from about 0.01 millitorr to 1,000,000 millitorr with different residual gases as desired. The test specimen may be placed under a mechanical load with the cold mass tank and another factors may be imposed upon the test specimen so as to simulate the actual use conditions.

22 Claims, 2 Drawing Sheets

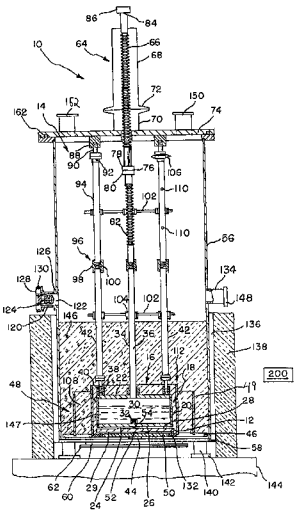

U.S. PATENT DOCUMENTS

5,940,784	A	*	8/1999	El-Husayni	374/43
5,997,174	A		12/1999	Wyland	374/43
6,039,471	A		3/2000	Wyland	374/43
6,095,680	A		8/2000	Baratta	374/43
6,142,662	A		11/2000	Narh et al.	374/44
6,273,604	B1		8/2001	Hemmerich et al.	374/45
6,487,866	B1	*	12/2002	Fesmire et al.	374/44
6,742,926	B1	*	6/2004	Fesmire et al.	374/43
2003/0072349	A1	*	4/2003	Osone et al.	374/43

OTHER PUBLICATIONS

Bapat, S. L., et al., "Experimental investigations of multi-layer insulation,", Cryogenics (UK) vol. 30,, No. 8 Aug. 1990, pp. 711–719.*

* cited by examiner

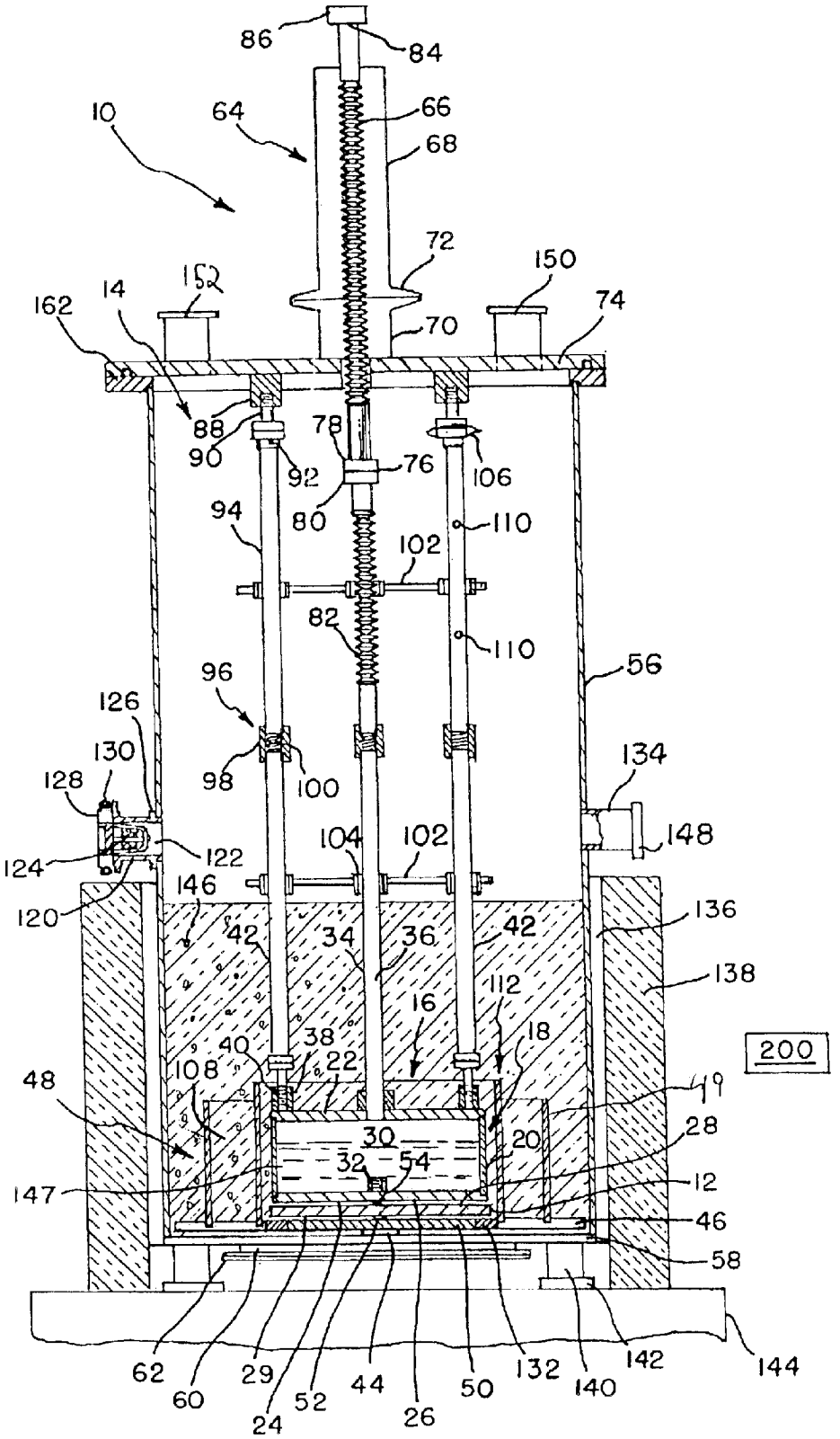
86
84
10
64
66
68
72
150
152
14
162
74
70
88
90
78
92
76
106
94
80
110
102
82
110
56
96
126
130
134
128
98
100
148
124
122
104
102
120
146
136
42
34
36
42
138
112
16
18
200
40
38
22
108
48
19
30
20
28
32
54
147
12
46
58
62
60
29
24
52
44
26
50
132
140
142
144

FIG. 1

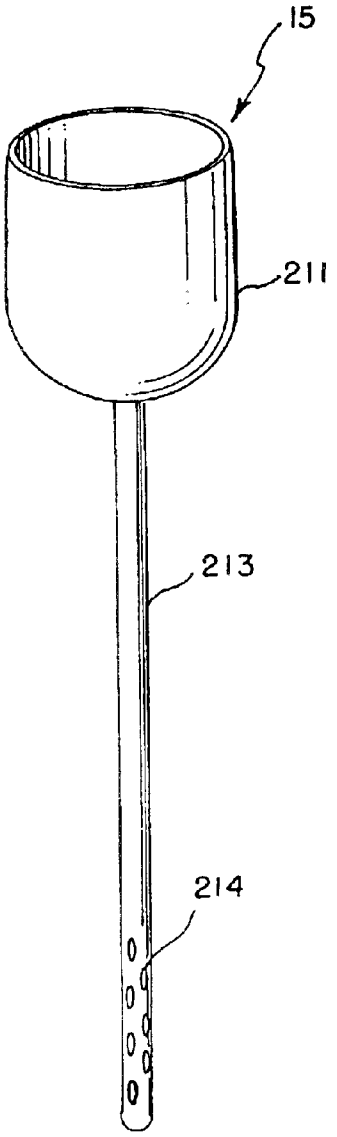

FIG. 2

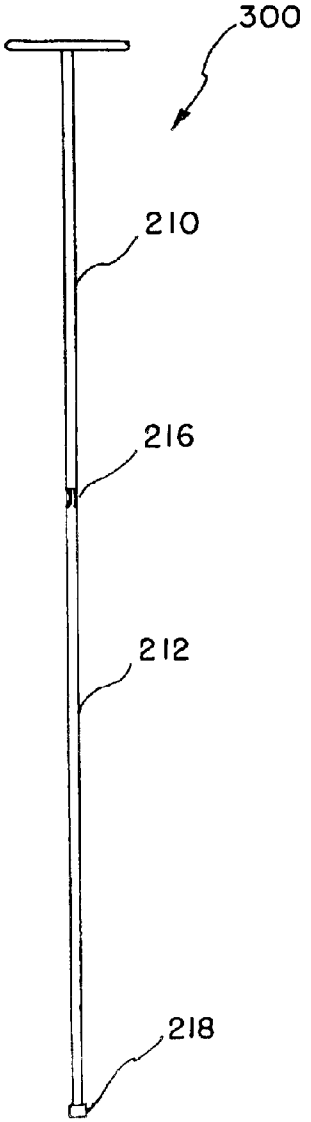

FIG. 3

THERMAL INSULATION TESTING METHOD AND APPARATUS

ORIGIN OF THE INVENTION

This invention was made in the performance of work under a NASA contract and by an employee of the United States Government and is subject to the provisions of Public Law 96-517 (35 U.S.C. §202) and may be manufactured and used by or for the Government for governmental purposes without the payment of any royalties thereon or thereof. In accordance with 35 U.S.C. §202, the contractor elected not to retain title.

BACKGROUND OF THE INVENTION

1. Field of the Invention

This invention relates to a test apparatus and a method of making precise thermal performance measurements of thermal insulation specimens, and more specifically to a comparative testing method and apparatus for evaluating thermal insulation materials and composite systems in flat plate configurations for low temperature applications.

2. Relevant Art

U.S. Pat. No. 3,242,716 is directed to a method and apparatus for testing thermal conductivity of insulation placed over a test apparatus. This device employs separate passageways for introducing a cryogenic fluid into the test chamber and disposing of the boiled-off gases. The method of testing is consistent with a boil off calorimeter, i.e., the absolute method as set forth in ASTM procedure C745. To perform the testing procedure according to the invention, an extended amount of time of carefully controlled monitoring may be necessary to complete the test. In comparison, the present invention follows the "comparative method" including controlled parasitic heat leak in which no monitoring of the testing process is required. Once the testing process is initiated, it will continue without the need for intervention until the cryogenic liquid is completely boiled-off, allowing for precise measurement of the thermal properties of the insulation material.

U.S. Pat. No. 4,396,300 is directed to a test apparatus for testing the heat transfer and friction characteristics of a tube. It does not teach how to test a flat thermal insulation specimen.

Precise measurement of thermal performance of a thermal insulation system is advantageous in many applications. As technology advances, the use of cryogenics has become more and more commonplace. As an example, hydrogen may become the common fuel source. An infrastructure for the storage, distribution and handling of liquid hydrogen would then be needed for many applications. This demand for the storage and handling of various cryogens will require the development of highly effective thermal insulation systems.

At least three ASTM procedures exist for testing thermal properties flat slab specimens: C177 (absolute method, guarded hot plate), C518 (comparative method, heat flow meter), and C745 (absolute method, boil off calorimeter). C177 is difficult to apply for a large temperature differential (high delta T) and in vacuum conditions. The document summary provided by ASTM for this procedure specifically warns that special precautions are required for conducting the test under vacuum conditions. C518 is used mostly for near ambient temperature testing of materials such as building insulation and requires the measurement of specimens of well known thermal transmission properties to calibrate the apparatus. C745 is very difficult in set-up and execution in part because of the necessity of providing a cryogenic guard vessel. These methods are typically limited to small temperature differences (such as 20K) and a limited range of vacuum pressure.

One valuable technique for testing the thermal performance of materials, preferably insulation material, is boil-off testing. Boil-off testing is accomplished by filling a vessel with a fluid that boils, or evaporates, below ambient temperature. Cryogens such as liquid nitrogen, liquid helium, liquid methane, liquid hydrogen, or other known refrigerants may be used. The vessel is placed on top of the testing material. The vessel (cold mass tank) is then filled with the cryogenic liquid. A calorimetry method is then used to determine the thermal conductivity of the testing material by determining the amount of heat that passes through the test material to the vessel containing cryogenic liquid. The cryogenic liquid boil-off rate from the vessel is directly proportional to the heat leak rate passing through the test material to the cryogenic liquid in the vessel. For a test material under a set vacuum pressure, the apparent thermal conductivity (k-value) is determined by measuring the flow rate of cryogenic boil-off gas at given warm and cold boundary temperatures across the thickness of the sample.

Although known cryogenic boil-off techniques and devices have been utilized to determine the thermal conductivity of insulation material, the previous techniques and devices have proven less than successful for a variety of reasons. First, few such cryogenic devices are in operation because of their impracticality from an engineering point of view. Previous cryogenic boil-off devices made it extremely difficult to obtain accurate, stable thermal measurements and required extremely long set up times. Prior testing devices also needed highly skilled personnel that could oversee the operation of the cryogen testing device for extended periods of time, often exceeding 24 hours to many days in some cases. Additionally, constant attention was required to operate previous cryogenic testing devices to make the necessary fine adjustments required of the testing apparatus. Second, the testing of high performance materials such a multilayer insulation requires extreme care during installation. Inconsistency in performing installation techniques is a dominant source of error and poses a basic problem in the comparison of such materials. Localized compression effects, sensor installation, and out-gassing provided further complications. Third, measurements of various testing parameters were not carefully determined or controlled in known testing devices. Measurement of temperature profiles for insulation material was either not done or was minimal because of the practical difficulties associated with the placement, feed-though, and calibration of the temperature sensors. Vacuum levels were restricted to one or two set points or not actively controlled altogether. Fourth, previous cryogenic testing devices required complex thermal guards having cryogenic fluid filled chambers to reduce unwanted heat leaks (end effects) to a tolerable level. The previous technique for providing thermal guards, i.e., filling guard chambers with the cryogen, caused much complexity both in construction and operation of the apparatus. Known techniques added the further complication of heat transfer between the test chamber and the guard chambers due to thermal stratification of the liquid within the chambers.

Accordingly, there exists a need for a method, preferably as simple as possible, for evaluating the thermal performance of materials under actual use conditions. These conditions include large temperature differences (as much as 200K) and a full range of vacuum pressure levels (between approximately 1×10^{-5} torr to approximately 1000 torr).

SUMMARY OF THE INVENTION

Consequently, it is a primary object of the present invention to provide a method and apparatus for obtaining data to measure the heat leak rate through materials under actual use conditions such as temperature, vacuum, environment, and/or mechanical loading.

It is a further object of the present invention to provide a method and apparatus for providing comparative heat leak rates and comparative apparent thermal conductivity values.

Another object of the present invention is to provide a method and apparatus which is easily employed to provide the thermal performance of actual specimens.

Accordingly, the present invention provides a test apparatus and method to measure the heat leak rate through materials.

To eliminate or minimize the foregoing and other problems, a new system and method of testing thermal insulation systems has been developed. In particular, the present invention overcomes the foregoing problems by providing a cryogenic testing apparatus having a boil-off calorimeter system for calibrated measurement of the apparent thermal conductivity (k-value) of a testing material, preferably insulation material, at a fixed vacuum level. Vacuum levels can range from high vacuum (below 1×10^{-5} torr) to soft vacuum (about 1 to 10 torr) to no vacuum (above 760 torr).

The test apparatus is preferably comprised of a test assembly having a single liquid nitrogen feed through assembly to fill liquid nitrogen into a cavity formed in a cold mass tank and subsequently vent nitrogen gas as it boils-off of the liquid nitrogen present in the cold mass tank cavity. The cold mass tank cavity receives cryogenic liquid from the feed through assembly wherein the cryogenic liquid contacts a side of the cold mass tank having contact surface directly contacting a test specimen mounted in the test apparatus. The cold mass tank and the test specimen are preferably contained within a vacuum chamber. Compressions rods may be utilized to press the cold mass tank into contact with the test specimen, providing a measurable mechanical loading to the test specimen, thereby controlling the thickness of the test specimen. Insulation and shield guards may surround the test specimen to reduce the at transfer from the sides of the test specimen to minimal and repeat able levels.

A heater may be used to apply a desired temperature on a first or heated side of the test specimen while the cold mass eventually achieves and maintains a steady state temperature, for example about 80K, on the cold or second side of the test specimen. The heat transfer through the test specimen boils off, or evaporates, the liquid nitrogen in the cold mass tank that can be measured by a mass flow meter. When the boil-off is complete and stability is reached, the thermal conductivity of the test specimen may be calculated from temperature and mass flow rate data. The vacuum environment may be established along with the mechanical loading and charts showing the thermal performance of the test specimen under loading and various vacuum conditions may be created for future use.

BRIEF DESCRIPTION OF THE DRAWINGS

The particular features and advantages of the invention as well as other objects will become apparent from the following description taken in connection with the accompanying drawing in which:

FIG. **1** depicts a cross sectional side view of a test assembly constructed in accordance with the preferred embodiment of the present invention;

FIG. **2** depicts a fluid fill assembly for use in filling the cold mass tank shown in FIG. **1**; and

FIG. **3** depicts a cold mass handling tool formed in accordance with a preferred embodiment of the present invention.

DETAILED DESCRIPTION OF THE PREFERRED EMBODIMENT

Referring to FIG. **1**, a test apparatus is illustrated at **10**. The test apparatus **10** is adaptable to test the thermal performance characteristics of a test specimen **12** so that designers and/or builders may accurately predict the heat losses in a similarly-shaped specimen.

Test specimen **12** may be formed of insulation material such as foams, powders, blankets, multilayer insulation systems, composite panels, and other materials or combinations of materials. Of course other materials and configurations as well coatings, biological substances, structural materials, etc., whether rigid or deformable could also be utilized as test specimens **12**.

Test apparatus **10** may be used for determining various thermal performance characteristics such as the heat transfer rate (Q), the heat flux rate (q), and the apparent thermal conductivity (k-value), and/or the insulating effectiveness value (R) of a test specimen **12**.

A test apparatus no formed in accordance with a preferred embodiment of the present invention has a vacuum chamber **14** enclosing a cold mass tank **16**. The cold mass tank **16** is preferably comprised of a substantively hollow cylinder **18** enclosed at each end and formed by rolling a ring **20** about top and bottom disks **22** and **24**. The bottom disk **24** provides contact surface **26** for contacting a first or top surface **28** of a typical test specimen **12**. The bottom surface **29** of the test specimen **12** is spaced by a known/or measurable thickness from its top surface **28**.

The cold mass tank **16** includes a cavity **30**. and, extending within a portion of cavity **30**, a receiver **32** which may take the form of a nut adaptable for receiving a threaded cold mass handling tool **300** (shown in FIG. **3**). An end of tool **300** includes an inner vessel threaded attachment member **218** that can be aligned with and screwed into the receiver **32** in order to position the cold mass tank **16** at a desired location within vacuum chamber **14**. A tube **34** extends from the top disk **22** and provides fluid communication through an interior bore **36** into the cavity **30** within cold mass tank **16**. This allows for passage of the cold mass handling tool **300** into the cold mass tank **16** as well for the ability to fill and vent the cold mass tank cavity **30** with a liquid fluid such as a cryogenic liquid nitrogen as will be explained in further detail below. The tube **34** is preferably welded into the top disk **22**.

The cold mass handling tool **300** facilitates removal of the cold mass tank **16** from the vacuum chamber **14**. In particular, specialized tool **300** has a T-shaped handle portion **210** and a handling tool portion **212**. The T-shaped handle portion **210** attaches to the handling tool portion **212** at a threaded screw connection **216**. The handling tool portion **212** also includes the inner vessel attachment **218** disposed at the end of tool **300** for attachment to receiver **32** of cold mass tank **16** as discussed above.

The cold mass tank **16** is also equipped with bosses **38** that contain threaded bores **40** therein. The bosses **38** are adapted to receive compression rods **42** which may be utilized to exert a desired mechanical force upon cold mass tank **16**, resulting in a change of pressure between contact surface **26** and test specimen **12**. By twisting the rods **42**

relative to the bosses **38**, the position of the cold mass tank **16**, and the resulting contact force, may be pre-selected. In the same manner, the desired test thickness for a specific test specimen **12** can be achieved. A load cell **44** may be utilized to measure the compression placed upon the test specimen **12** by the compression rods **42** acting through cold mass tank **16**. Load cell **44** may be located between a plate assembly **46** which is preferably substantially isothermal and a bottom surface **58** of a housing **56** defined by vacuum chamber **14**. The isothermal plate assembly **46** is preferably grooved to accept an outer guard ring **48**, a copper disk **50**, and the test specimen **12** itself, as will be explained in more detail below.

The copper disk **50** is preferably located in the center of the isothermal plate assembly **46**. A first temperature sensor **52** is preferably located on top of copper disk **50** in order to measure the warm boundary temperature near the bottom surface **29** of test specimen **12**. A second temperature sensor **54** is preferably located on the top surface **28** of the test specimen **12** to measure the cold boundary temperature near the bottom surface **26** of the cold mass tank **16**. These temperature data are provided to a processor **200**. The copper disk **50** and the cold mass tank contact surface **26** are preferably of the same or similar configuration and have a diameter which has a ratio of about 3:4 to the diameter of the test specimen **12**.

Disk **50** is preferably made of copper to ensure the surface flatness substantially matches the bottom of the vacuum chamber **14** and/or load cell **44** as well as to direct the heat flow substantially in the axial direction through test specimen **12**. When forming the isothermal plate assembly **46**, it is preferable to remove any sharp edges to provide for convenient centering and fit-up of the test specimen **12** upon installation.

The bottom surface **58** of vacuum chamber **14** is preferably located below the load cell **44**, if utilized, and the isothermal plate assembly **46**. A heater **60** separate from vacuum chamber **14** is preferably positioned below bottom surface **58**. and a fire blanket **62**, preferably in multiple layers, may be located below heater **60** to reflect heat backup towards the test specimen **12** as well as to provide a safety barrier while conducting the tests in the vacuum chamber **14**. Further insulation wraps **138** may be positioned about the exterior of the vacuum chamber **14** to provide test apparatus **10** with additional thermal stability to negate effects of varying room environmental conditions.

In order to fill the cold mass tank cavity **30** with the cryogenic liquid nitrogen, a feed-through assembly **64** is utilized. Feed through assembly **64** preferably includes a thin-walled, hollow bellows **66** contained within a barrel **68** that is connected to an extension **70** at plan **72**. Bellows **66** passes through a top **74** of vacuum chamber **14** and connects to a fitting assembly **76**. In the preferred embodiment, a female nut **78** forms the upper portion of fitting assembly **76** while a copper gasket retainer **80** forms the lower portion of fitting assembly **76**. A second, thin-wall bellows **82** connects with tube **34** as illustrated in FIG. **1**. Accordingly, the bore **36** communicates through the tube **34**, the hollow bellows passageways **82**, **66** and an outlet port **84**, where it joins a flow meter **86**, the operation of which will be explained. The funnel or cold mass fill tube assembly **15** shown in FIG. **2**, may be used to cool, fill, and vent liquid or gaseous nitrogen to or from the cold mass tank **16** through the single, common outlet port **84**. The thin-wall bellows **66** and **82**, with an equivalent heat transfer length of about four times the installed length, are employed to minimize the solid conduction heat leak to the cold mass tank **16** and its cavity **30**.

The funnel and fill tube assembly **15**, as shown in FIG. **2**, includes a large fluid receiving substantially cylindrically-shaped portion **211** in fluid communication with an elongated tubular portion **213** adaptable for extending through the bore **36** to the bottom of cold mass tank **16**. A series of small openings **214** extend through lower wall portions of tubular portion **213**, allowing cryogen liquid nitrogen to flow from cylindrical portion **211**, through tubular portion **213** and exit via openings **214** into the cold mass tank cavity **30**. The tubular portion **213** has a smaller outer diameter than the inside diameter of bore **36** such that the vent nitrogen gases may exit the cold mass tank cavity **30** through the same bore **36** at the same time that liquid nitrogen is introduced into cavity **30** during the filling process. The preferable diameter ratio for optimal cooling and filling (least time required) is about 1.4 (bore **36** inner diameter to tubular portion **213** outer diameter). Because the bore **36** and funnel and fill tube assembly **15** permit the combined and simultaneous filling and venting of the cold mass tank cavity **30**, additional ports in the cold mass tank cavity **30** are unnecessary. By minimizing the ports extending through cold mass tank **16**, the unwanted heat leak into the cold mass tank **16** as well as the possibility of introducing additional complications during installation and removal of the cold mass tank **16** is significantly reduced.

The contact surface **26** of the cold mass tank **16** is preferably of the type that is "visually flat" when laid on a "marble" table with a smooth, machined finish (not polished). The exterior surface of ring **18** is preferably highly polished. In addition, reflective films (such as aluminized or silvered plastic) may be applied to the top and side of the cold mass tank for enhanced radiation reflectivity.

In order to apply a compressive force to the cold mass tank **16**, compression rods **42** are retained by holding fixtures **88**, each of which receives a threaded cap screw **90** which, in turn, is connected at a plug **92** to an extension tube **94**. Each extension tube **94** connects to a compression rod **42** at a spring assembly **96**. Each spring assembly **96** preferably includes a sleeve **98** that connects the extension tube **94** with a compression rod **42**. Internal to each sleeve **98** and intermediate each extension tube **94** and compression rod **42** is a spring member **100** which may be utilized to apply a desired pressure against cold mass tank **16** and ultimately upon test specimen **12** by adjusting the length of each of the compression rods **42**. The spring members **100** may be replaced by spacers (not shown) for high loading conditions or for testing of very compliant materials. The sleeves **98** may be friction fit with the extension tubes **94** as well as the compression rods **42** and set screws or cotter pins may also be utilized to retain the position of the sleeve **98** relative to the extension tube **94** and/or the compression rod **42**. Each compression rod **42** and associated extension tube **94** is preferably constructed out of strong, lightweight, low thermal conductivity materials such as fiberglass reinforced epoxy composites.

The spring compression chamber **96** has been found to assist in providing for the testing of the specimens **12** that are rigid or soft or have irregular surfaces. Furthermore, the spring feature has been found to assist in providing superior thermal contact between the cold mass tank contact surface **26** and the specimen top surface **28** during the natural transitions of thermal cycling from warm to cold to warm conditions. The springs may be simply and conveniently removed and/or replaced with spacers for the performance of high compression load testing. Mechanical loading of the cold mass tank **16** against the test specimen **12** may range from zero to above 50 psig in a preferred embodiment.

One or more support guides **102** may be utilized to provide lateral support to the compression rods **42** or exten-

sion tubes **94**. In the preferred embodiment there may be three compression rods **42**, with one compression rod **42** obscured from view in FIG. **1** by flow-through assembly **64**, with the three compression rods **42** forming a triangular shape as viewed from above. At the center of the triangle support guide **102** is an orifice **104** allowing the feed through assembly **64** and/or the tube **34** to extend through guide **102**. The support guide **102** is preferably constructed of lightweight acrylic (polycarbonate). Radiation shields (aluminized of silvered plastic films) are attached to the top and bottom of each triangle support guide **102** to reflect heat away from the top surface of the cold mass tank **16**.

Safety wire such as stainless steel lock wire **106** may be utilized to secure the cap screw **90** to the plug **92**. The plug **92** may be joined by epoxy to an internal portion of the tube **94** or otherwise connected in a conventional manner. Weep holes **110** may be machined into the extension tube **94** to prevent pressure buildup within the extension tube **94**. The holding fixtures **88** are preferably welded to the vacuum chamber lid **74** as illustrated in FIG. **1**. Twisting of the compression rods **42** relative to holding fixture **88** and threaded bores **40** serves to adjust the length the various rods **42**, which, in turn, adjusts the position of the cold mass assembly **16** relative to test specimen **12**, thereby altering the thickness of the test specimen **12** under various test conditions. It should be noted that the thermal contraction in going from installation (at ambient temperature) to test conditions (at cryogenic temperature) is compensated for in this installation process.

Edge guard ring assembly **48** is preferably centered relative to the isothermal plate assembly **46**. The guard ring assembly **48** is preferably constructed of lightweight material in continuous wraps **108** having highly reflective surfaces that function as radiation shields. Guard ring assembly **48** preferably includes two separate guard rings, an outer guard ring **49** and an inner guard ring **112**. The outer guard ring **49** is preferably a specimen edge guard ring while the second guard ring **112** is preferably a cold mass edge guard ring.

Heat leak to the side and top of the cold mass tank **16** and heat leak to the edge of the test specimen **12** are minimized by four features working together: (1) reflective films on side wall and top of the cold mass tank **16**; (2) isothermal plate assembly **46**; (3) the use of two concentric sets of radiation shields illustrated by guard rings **49**, **112**; and, (4) the filling of the surrounding space with bulk insulation material **146**. Because of the steps taken to control the temperature in the test apparatus **10**, the affect of any heat leak on the testing process is repeatable within a narrow range from test to test and from installation to installation.

In order to evacuate the vacuum chamber **14**, a vacuum port **120** may be utilized. The vacuum port **120** preferably extends into the housing wall **56** vacuum chamber **14** and provides a bore **122** in fluid communication between a vacuum pumping system (not shown) and the interior of the vacuum chamber **14**. Intermediate the bore **122** and the vacuum pump is a filter assembly **124** comprising a first filter including stainless steel wool, copper wool, synthetic pad, or other appropriate material. A second layer of crushed fiberglass is located intermediate a third layer that includes an appropriate first filter material. The three filtering media extend into the bore **122** and are retained by frame wire **126**. A seal assembly **128** includes an O-ring seal **130** and is designed to mate with a standard vacuum flange, but could be easily modified for other types and sizes.

The filter assembly **124** is designed to protect against both powder and particulate intrusion into the vacuum chamber **14**. The load cell **44** may utilized with centering ring **132** thereabout to assist in centering the load cell **44** in a desired position. A vacuum transducer port **134** is illustrated as located on the housing wall **56** of vacuum chamber **14** to provide a convenient place to measure the internal vacuum within chamber **14**.

A bake out heater **136** may be placed about a lower portion of the housing wall **56**. Its use will be described in further detail below. A fiberglass insulating wrap **138** may surround the heater **136** as well as the remainder of the housing wall **56**. The housing wall **56** is preferably supported by legs **140** which may be insulated by spacers **142** from a weight scale **144**.

Inside the vacuum chamber **14** are insulating materials such as aerogel beads **146** or other suitable low thermal conductivity bulk-fill material which is placed about the cold mass tank **16** and the edge guards **49**, **112**. The vacuum chamber **14** may be reached through top ports **152**, **150**. The insulation **146** is preferably inserted to a level above the cold mass tank **16** and may extend to about the first support guide **102**. The insulation **146** is preferably low-outgassing, reusable, minimal dusting, and hydrophobic.

Precise measurement of the thermal performance (such as the rate of heat leakage) of a test specimen **12** consisting of normal insulating material is obtainable with test apparatus **10**. Of particular interest are a material's insulative properties when subjected to temperatures ranging from 77 kelvin (K) to 350 K which has been found to include cryogenic fluids, refrigeration equipment, and moderately high temperature process systems. The test apparatus **10** could be easily adapted for testing in the temperature range of about 4K to 400K or higher temperatures. Also of interest is the full range vacuum pressure conditions from high vacuum (below 1×10^{-5} torr) to soft vacuum (approximately 1–10 torr) to no vacuum (above 760 torr). The test apparatus **10** has been designed to provide these environments as well as a specific gaseous environment in the test apparatus **10** and to evaluate the test specimen **12**.

Heat leak rate measurements for a higher performance insulation systems are by nature difficult because the heat leak rate through the test specimen **12** can be small relative to the total heat leak rate to the cold mass tank **16**. For cryogenic boil-off tests, obtaining proper saturation conditions of the liquid is critical and is therefore a further complication in successfully completing this type of test.

Before the present invention, it is believed that such tests were prohibitively expensive due to the specialized equipment, expertise and extended preparation time required. While insulation materials are the preferred test specimen **12**, other specimens such as coated structures, biological substances, etc., may be tested. Actual use conditions including large temperatures differences (such as 300 K on one side and 77 K on the other) may be examined. Different vacuum pressure levels (from high vacuum to no vacuum) may be utilized and different gas environments may be tested as well. The gas environment, or residual gas, such as nitrogen, carbon dioxide, air, argon, helium, or other appropriate gas may be provided through ports **150** and **152** into the volume of the vacuum chamber **14**. Finally, compressive mechanical loads or other combinations of all of these factors may be evaluated with the test apparatus **10** method of the present invention.

The test apparatus **10** may be utilized to measure heat leak rate through materials under conditions identical to actual use for temperature, vacuum, gaseous environment and/or mechanical loading. The preferred method of the present

invention is to achieve a steady-state boil-off calorimetry using liquid nitrogen or any other suitable fluid with a normal boiling point below ambient temperature. Comparative heat leak rates and apparent thermal conductivity values may be obtained from such tests. Absolute values of the same may be calculated based on the similar testing of a known material (a standard reference material).

Test apparatus **10** has sensors including the temperature sensors **52** and **54**, the vacuum transducer **148**, the load cell **44**, the weight scale **144**, and the mass flow meter **86**, which are preferably all connected to a processor assembly **200** as shown in block diagram in FIG. **1** which provides real-time data display and recording capability. The processor assembly **200** may take the form of a PC-based data acquisition system. In addition to utilizing a plurality of sensors for monitoring the thermal characteristics of the test specimen **12**, the test apparatus **10** may include a control system for conducting and initiating various tests. The data and control system can be made semi-automated for conducting test and evaluation of large numbers of specimens or, for example, a production quality control application.

The test apparatus **10** is relatively quick in performance of the actual testing procedure as well as allowing for quick specimen change out. Apparatus **10** is mobile as well as portable and can be adapted to specimen of significantly differing size and thickness. The thickness of a test specimen **12** is easily adjusted by merely adjusting screws **90** to increase or decrease pressure against cold mass tank **16** that, in turn, varies the pressure against the test specimen **12**.

Although boil-off is the preferred method of utilizing test apparatus **10**, dynamic (transient heat flux) methods of testing may also be utilized with test apparatus **10**. The present invention is believed to be more efficient to set up and operate than known prior art assemblies and is useful for cryogenic refrigeration and low temperature testing. It is more economical due to the relatively small amounts of fluid consumed, quick change out of test specimens, and no user intervention required during steady-state operation. The test apparatus **10** can be set up and operated for a very minimal user intervention.

The procedure for utilizing test apparatus **10** is considered to be straightforward. With vacuum chamber **14** initially empty, a test specimen **12** is placed on copper disk **50** located on the bottom **24** of the vacuum chamber **14**. Cold mass tank **16** is disposed within vacuum chamber **14** so that the contact surface **26** contacts the first surface **28** of the test specimen **12**. The edge guard rings **49**, **50** are placed about the cold mass tank **16**. The position of cold mass tank relative to test specimen **12** can be adjusted by merely adjusting the position of the compression rods **42** relative to the bosses **38** and holding fixtures **88**. It is important to remember that as the temperature changes in the vacuum chamber **14**, some of the components may shrink or expand with the change in temperature. Spring assemblies **100** are included to provide compliance and ensure good thermal contact of both sides of the test specimen **12** during all phases of the test operations. Insulation material **146** is positioned to fill the vacuum chamber **14** up to a desired level, preferably extending beyond cold mass tank **16** into vacuum chamber **14**. A desired vacuum pressure level is then produced within vacuum chamber **14**. The cold mass tank **16** is then cooled and filled with liquid nitrogen or other appropriate boil-off cryogenic fluid. Once the desired steady state conditions are achieved, the comparative heat flux or k-value can be calculated. The final steady-state measurement value is typically taken at the last moment before the cold mass tank **16** becomes empty. This ensures repeatability and strict accuracy of the thermodynamic condition of the boil-off liquid.

The comparative apparent thermal conductivity (k-value) is determined by using the Fourier heat conduction equation:

$$Q = \text{Heat Transfer Rate} = \frac{k(\text{Area})(\Delta T)}{\Delta x} \quad [W] = [J/s]$$

where, k=apparent thermal conductivity (k-value) [mW/m-K]

ΔT=temperature difference between the warm boundary surface and the cold boundary surface [K]

Δx=thickness of the test specimen [m]

The equation is modified for use of the circular heat transfer surface area to:

$$Q = \frac{\pi\, h\, d^2 \Delta T}{4\Delta x}$$

where: d=effective diameter of the cold mass tank [m]

Remember, $Q=M\times(H_{fg})$ [W]=[J/s]

H_{fg}=Heat of vaporization of the boil-off liquid [J/g]

M=Mass flow rate of the boil-off gas [g/s]

The mass flow rate (or boil off flow rate) is typically measured by two ways: flow meter and weight scale. The entire test apparatus **10** is typically placed on a weight scale. Flow computed from the weight decay rate is used to check the flow indicated by the flow meter. The weight scale is also helpful in the filling process of cold mass tank **16** and other test operations.

While the steady-state boil off method is particularly attractive for determining thermal characteristics for test specimens **12** utilized in cryogenic or low temperature systems, transient heat flux testing may also be performed. The warm and cold boundary conditions are set and stabilized as desired. The boil-off liquid is quickly admitted to the cold mass tank **16** by the appropriate filling funnel and tube assembly **15** formed in accordance with the present invention. The resulting time-temperature response is recorded by the data acquisition system. For example, the freezing rate and temperature profile of a biological tissue can be studied by using temperature sensors embedded within the test specimen.

This test apparatus **10** is constructed as a comparative test device in the preferred embodiment. A test specimen **12** of known characteristics may also be tested to determine parasitic heat leak rate so that an absolute k-value may be calculated from the comparative k-value.

While the preferred embodiment relates to use with cryogenic fluids, other fluids, with normal boiling points below room temperature may also utilize a similar test apparatus **10** within the scope of the present invention. The evaluation of cryogenic insulation typically includes high performance materials that have apparent thermal conductivities below 0.1 mW/m-K. There is no higher limit k-value for the preferred embodiment. The test apparatus has a sufficiently high sensitivity such that thermal systems with k-values in the range of 0.01 mW/m-K to 100 mW/m-K can be effectively tested.

Numerous alternations of the structure herein disclosed will suggest themselves to those skilled in the art. However, it is to be understood that the present disclosure relates to the preferred embodiment of the invention which is for purposes of illustration only and not to be construed as a limitation of the invention. All such modifications which do not depart from the spirit of the invention are intended to be included within the scope of the appended claims.

Having thus set forth the nature of the invention, what is claimed herein is:

We claim:

1. A test apparatus for evaluating thermal properties of a test specimen, comprising:

a chamber;

a cold mass tank located within the chamber, said cold mass tank having a cavity adaptable for receiving a quantity of liquid, said cold mass tank also having a contact surface adaptable for contacting a first side of the test specimen positioned within said chamber, with the chamber having a contact surface adaptable for contacting a second, oppositely disposed side of the test specimen;

a quantity of bulk insulation material surrounding the cold mass tank;

a passageway assembly extending through the chamber, bulk insulation material and into the cold mass tank for introducing a quantity of liquid fluid into the cold mass tank and subsequently expelling boiled-off gas from the cold sass tank cavity, whereby the thermal performance of the test specimen is determined; and

a plurality of spaced-apart and parallel extending compression rod assemblies located within the chamber, each compression rod assembly comprising an elongated spring rod and an elongated extension tube having confronting end portions extending within a connecting sleeve and engaging opposite ends of a compression spring, wherein each compression rod assembly is disposed such that one end portion engages the chamber and an opposite end portion engages the cold mass tank for pressing the cold mass tank against the specimen with a predetermined and controllable level of force.

2. The test apparatus of claim **1**, further including a sensor assembly electronically connected to a processor capable of collecting sensor data measuring properties indicative of thermal properties of the test specimen.

3. The test apparatus of claim **2**, wherein the sensor assembly includes at least one first temperature sensor in contact with the first side of the test specimen and at least one second temperature sensor in contact with the second side of the test specimen.

4. The test apparatus of claim **2**, further comprising a processor in communication with the sensor assembly for calculating at least one thermal characteristic of the test specimen.

5. The test apparatus of claim **2**, wherein the sensor assembly further comprises at least one sensor in fluid communication with the liquid fluid in the cold mass tank and in electronic connection with the processor.

6. The test apparatus of claim **1**, further comprising a heater disposed to provide heat to the contact surface of the chamber, whereby heat travels from the chamber, through the test specimen and serves to heat the liquid located in the cold mass tank.

7. The test apparatus of claim **1**, wherein the chamber is a vacuum chamber having an air-tight barrier adaptable for maintaining a chamber pressure between about 0.01 and 1,000,000 millitorr.

8. The test apparatus of claim **1**, further comprising a vacuum port equipped with a filter assembly having a base with an O-ring forming a seal intermediate the vacuum port and the base, and filter media extending from the base having a first layer of fine filter media and a second layer of coarse filter media, wherein fluid communication through the base into the chamber requires passage through at least a portion of the filter media.

9. The test apparatus of claim **1**, further comprising at least one edge guard positioned within the chamber, extending through a portion of the bulk insulation material and at least partially encircling the cold mass tank.

10. The test apparatus of claim **1**, wherein the passageway assembly comprises a single feed-through bore extending through aligned openings in the chamber, the bulk insulation material and the cold mass tank cavity for providing the only passageway adaptable for introducing liquid fluid into the cold mass cavity and for venting boil-off gas exiting from the cold mass cavity.

11. The test apparatus of claim **1**, wherein the liquid fluid is a cryogenic liquid.

12. The test apparatus of claim **1**, further comprising a load cell located between the test specimen and wall of the chamber for measuring the pressure imposed by the at least one compression rod assembly against the test specimen.

13. The test apparatus of claim **1**, wherein the bulk insulations material comprises a hydrophobic material enclosing the cold mass tank and contacting an edge portion of the test specimen.

14. The test apparatus of claim **13**, wherein in the bulk insulation material is low outgassing, reusable and creates minimal dusting.

15. A method of measuring the thermal characteristic of a test specimen, comprising the following steps of:

(a) placing a test specimen having first and second oppositely disposed surfaces within a vacuum chamber;

(b) positioning a cold mass tank having a cavity within the chamber so that a contact surface boundary of the cold mass tank cavity engages the second surface of the test specimen;

(c) compressing a plurality of spaced-apart and parallel extending compression rod assemblies between the chamber and the cold mass tank with each compression rod assembly comprising a compression rod and an extension tube having confronting ends extending within a connecting sleeve and engaging opposite ends of a spring for pressing the cold mass tank against the test specimen with a predetermined and controllable level of force;

(d) surrounding the cold mass tank with a quantity of bulk insulation material;

(e) heating the first surface of the test specimen;

(e) filling the cold mass tank cavity with a liquid fluid;

(f) completely venting all boiled-off gases from the cold mass tank cavity; and

(h) measuring the steady state heat transfer through the test specimen between the first and second surfaces.

16. The method of claim **15**, further comprising the step of measuring a value of the liquid fluid in the cold mass tank and utilizing the value to provide the insulation value of the test specimen.

17. The method of claim **15**, further comprising the step of drawing and measuring a cold vacuum pressure in the vacuum chamber.

18. The method of claim **15**, further comprising the step of applying a specific gaseous environment in the chamber.

19. The method of claim **15**, including the further step of filling the cold mass tank cavity with a cryogenic liquid.

20. The method of claim **15**, including the further step of filling the cold mass tank with liquid nitrogen.

21. The method of claim **15**, including the further step of maintaining the cold mass tank contact surface at a steady state temperature of approximately 80 K.

22. The method of claim **15**, including the further step of applying a vacuum to the chamber of approximately 1×10^{-5} torr.

* * * * *